Computer Generated Visual Assistance to a Surgical Operation : the Retroperitoneoscopy

Eric Bainville[1], Philippe Chaffanjon[2], Philippe Cinquin[1]

[1] TIMC, Faculté de Médecine de Grenoble
38706 La Tronche FRANCE

[2] Service de chirurgie générale et thoracique, CHU de Grenoble
38706 La Tronche FRANCE

Abstract

We present here experiments on a system of computer assisted surgery.

A 3D position measuring device is used to obtain the position of the usual surgical tool partly inserted in the patient's body. These 6D position coordinates are used to compute and display gray-level CT-like slices in plane cuts depending on the position of the tool. A simplified representation of the tool is superimposed to these images. This process is repeated to obtain a real time visualisation during the operation.

This system allows the surgeon to know precisely the position of his tool in the patient's body.

We explain our goals, the nature of the surgical operation, the system architecture and operations. We give the results of an experiment carried out on a cadaver.

Introduction

The goal of our project is to help the surgeon localizing his tool inside the patient's body during an invasive operation. This help may be provided through different senses : visual, touch (force feedback) and sound. The help should make easier the avoidance of sensitive organs and vessels and also facilitate the approach of the zones the surgeon wants to investigate.

We present here our first results of such a help in which the feedback is only visual and displayed on the screen of a graphic workstation.

We explain in section 2 what is the retroperitoneoscopy. Then, we describe in section 3 the architecture of the system. Section 4 summarizes the operation schedule. In section 5, we give the results of the experiments on a cadaver.

The retroperitoneoscopy

This operation consists in the introduction of a rigid endoscope (see figure 1) inside the patient's body [2] [8]. The endoscope is free of any optics. An optic fiber carries cold light to the internal end of the cylinder.

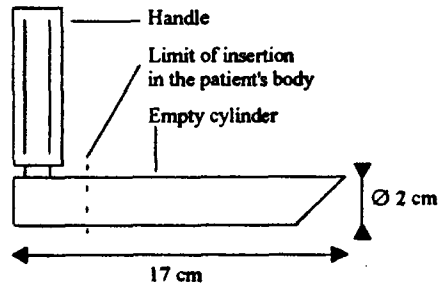

Figure 1 : The endoscope

The endoscope is used to explore a virtual zone between the intestines and the spine (see figure 2). This exploration is classically used to give a

diagnostic about tumorous ganglions, but may also be used in therapeutic operations.

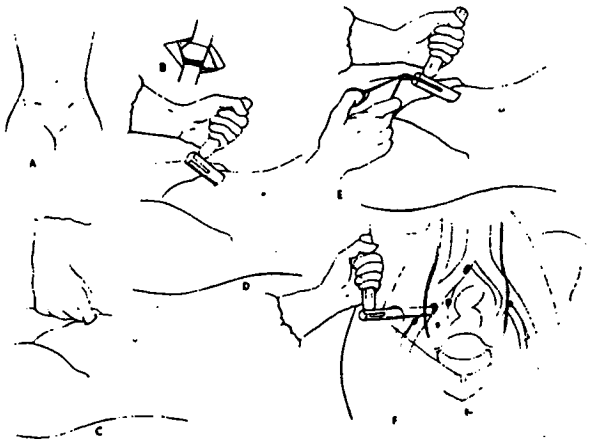

Figure 2 : The retroperitoneoscopy.

The surgeon moves the endoscope inside the body by pushing the surrounding organs. Without our help, he deduces the position of his tool from what he sees through it, from the force feedback applied on the tool by the organs, from his general anatomical knowledge and from his knowledge of the patient's special characteristics.

The vision at the end of the endoscope is frequently insufficient. This is the reason why a system locating the position of the tool with respect to the patient's organs may be useful.

Description of the system

An optically localizable object is rigidly fastened to the endoscope (see figure 3). This object has several infra-red diodes on it. The positions of these diodes are tracked in real time by a system of cameras present in the operation theatre, and this system translates the set of 3D points into a 6D position of a reference system associated with the object.

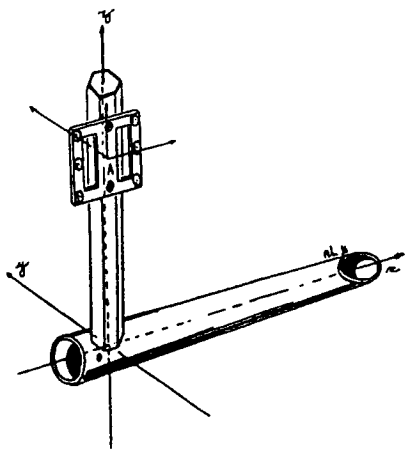

Figure 3 : The localizable object mounted on the endoscope.

The position of the object is sent to a workstation which computes several plane slices of the 3D data volume. This 3D volume is the result of a CT or MRI acquisition of the working zone made before the operation.

The computation of the images require the real-time knowledge of the transformations between several reference systems :

- the local frame A associated with the optically localizable object,
- the frame O in which the geometry of the endoscope is known,
- the frame C associated with the 3D data volume and with the patient's body,
- the absolute frame P associated with the localization cameras.

Figure 4 shows the different frames present in the operation room.

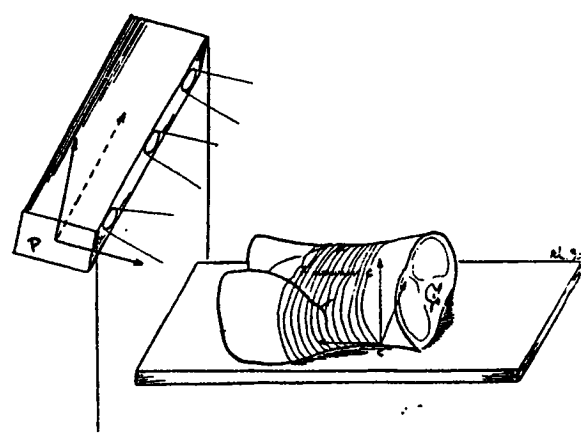

Figure 4 : The different frames involved in the computations (see also figure 3).

We will denote by F::G the rigid transformations between systems of coordinates F and G.

The positioning device gives A::P, and we need to know O::C. This implies finding the transformations O::A and P::C. These transformations are constant during the operation (if we assume that the patient does not move) ; they just need to be computed at the beginning of the operation.

These transformations are obtained by rigid matching of 3D characteristic structures whose coordinates can be measured in both frames.

On the endoscope (to obtain O::A), we use the axis of the cylinder and the handle.

On the patient (to obtain P::C), we propose two solutions :

- Small metallic balls are inserted under the skin before the CT acquisition. These balls are visible

on the slices, and may also be localised visually and pointed by a 3D locator device. This solution is not realistic in the case of a real patient, but we used it for the experience on the cadavre.

- The surfaces of the bones (especially the pelvis) are used. They are visible on CT and MRI images, and can be seen on echographic images. The echographic acquisition is done using a 6D localized echographic probe.

Operation

We have divided the operation into four steps.

- The acquisition of the 3D images and their transfer on the computer system. After this transfer, an operator extracts the characteristics (positions of the small balls or surfaces of the bones) needed to the localization of the patient in the operation room. The operator extracts at the same time the positions of the targets to be investigated.
- The endoscope is calibrated : A::O is computed (see figure 5).

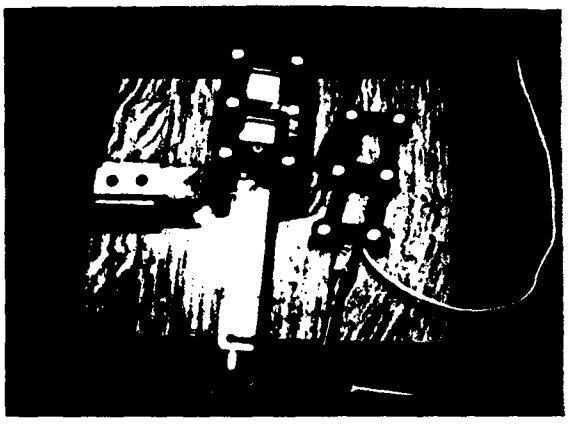

Figure 5 : Calibration of the endoscope using a home made support allowing only the rotation of the endoscope around his handle axis.

The operation begins here.

- The patient is located with respect to the camera system : we obtain P::C (see figure 6).

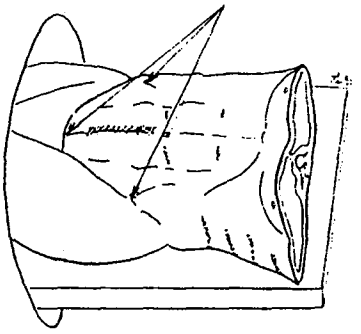

Figure 6 : Localization of the patient in the absolute referentiel. The positions of the four balls are entered using a 3D pointer ; the figure shows the implantation of the four balls.

- We now read in real time the transformation A::P and after composition, the transformation O::C which is the position of the endoscope in the 3D data volume.

Results

We have done an experimental operation on a cadaver. The data volume consisted of 50 512x512 CT images. Each slice was 5 mm thick. The voxel image covered a volume of 393x393x250 mm.

Four small metallic balls were inserted under the patient's skin to compute P::C. During the operation, the average error between the real position of the end of the endoscope and its computed position was about 2 mm.

We displayed in real time three reconstructed slices : one large axial slice and two smaller sagittal and frontal slices. Each slice was centered on the internal end of the endoscope and a coloured segment representing the axis of the endoscope was drawed on the grayscale image (see figure 7).

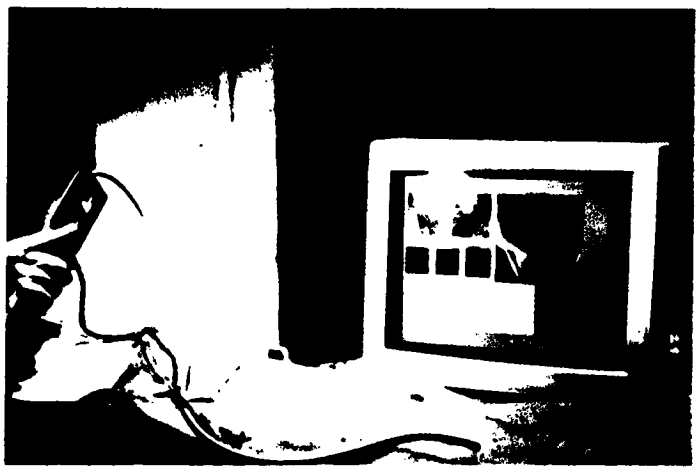

Figure 7 : The images displayed during the operation.

The frame rate was about one per second on a standard workstation.

The main problem we encountered is that when an object is inserted in the patient's body, only the bones do not move : all others organs do not have the same position than in the 3D data volume. As figure 2 shows, the targets and important vessels are near the spine and don't move so much : the localization error is acceptable in the domain of interest.

Conclusion

The experience has proved that such assistance will improve the precision and make easier that kind of operations. We now have to enhance the quality of the feedback in several directions :

- speed, by using 3D accelerated workstations and optimizing the computation of the slices,
- rendering, by displaying 3D textured surfaces representing the different organs,
- precision, by using the echography-based positioning method and simulating the motion of the organs during the motion of the endoscope,
- mechanical realism, by simulating the dynamics of the organs,
- guidance quality, by determining a safe trajectory for the tool and constraining the surgeon to follow it.

Some of the above points implie the creation of a generic anatomic atlas and its adaptation to the patient's anatomy. We are currently building one. We are also working on the way to use a secure force feedback system.

Our system may also be used for simulation purposes.

References

[1] - A. Adams, W. Krybus, D. Meyer-Ebrecht, R. Rueger, R. Gilsbach, J.M. Moesges, G. Schloendorff, Computer-assisted surgery, IEEE Computer Graphics and Applications 1990, 43-51

[2] - P. Chaffanjon, Rétropéritonéoscopie assistée par ordinateur, Post-graduate studies research report

[3] - J.F. Dyon, R. Sarrazin, Les moyens invasifs d'exploration du système lymphatique, IXe Réunion du Groupement Européen de Lymphologie, Grenoble, 1988

[4] - M. Fadda, S. Martelli, P. Dario, M. Marcacci, S. Zaffagnini, A. Visani, First steps towards robot-assisted dissectomy and arthroplasty, Innov. Tech. Biol. Med. 1992, Vol. 13, 394-408

[5] - T. Gretiz, C. Bohm, S. Holte, L. Eriksson, A computerized brain atlas : construction, anatomical content, and some applications, J. Comput. Assist. Tomogr. 1991, Vol. 15, 26-38

[6] - K.H. Hoehne, M. Bomans, M. Riemer, R. Schubert, W. Lierse, A volume-based anatomical atlas, IEEE Computer Graphics and Applications 1992, 72-78

[7] - W. Krybus, A. Knepper, L. Adams, R. Rueger, D. Meyer-Ebrecht, Navigation support for surgery by means of optical position detection, Proc. CAR'91, Springer Verlag 1991, 362-366

[8] - R. Sarrazin, J.F. Dyon, A. Vernay, P. Coquilhat, La retropéritonéoscopie, La lettre chirurgicale, mai 1990

[9] - R.H. Taylor, H.A. Paul, C.B. Cutting, B. Mittelstadt, W. Hanson, P. Kazanzides, B. Musits, Y.Y. Kim, A. Kalvin, B. Haddad, D. Khoramabadi, D. Larose, Augmentation of human precision in computer-integrated surgery, Innov. Tech. Biol. Med 1992, Vol. 13, 450-468