TWO RESULTS CONCERNING AMBIGUITY IN SHAPE FROM SHADING

Michael J. Brooks

The School of Mathematical Sciences,
Flinders University of South Australia,
Adelaide, S.A. 5042, Australia.

ABSTRACT

Two *shape from shading* problems are considered, one involving an image of a plane and the other an image of a hemisphere. The former is shown to be ambiguous because it can be generated by an infinite number of ruled surfaces. The latter, in contrast, is shown to have only the hemisphere and its reversal as solutions, although some subregions of the image are shown to be infinitely ambiguous.

I INTRODUCTION

The problem of recovering object shape from image intensity has been termed the *shape from shading* problem [5]. While several methods have been devised to solve a simplified form of this problem, little attention has been paid to the fundamental question of precisely how much can be determined from shading information. This paper addresses the more general question of the *computability* of shape from shading.

The principal factors determining an image are illumination, surface material, surface shape and image projection. The image-forming process encodes these factors as intensity values. Inferring shape from shading thus corresponds to decoding the information encoded in the intensity values [1]. In order to recover surface shape, it is necessary to know some details about the illumination, surface material and projection that were involved in the formation of the image. It may be, however, that there are many shapes that can generate the image under these conditions. If this is so, the image is said to be *ambiguous* and the particular surface that generated the image cannot be determined.

The shape from shading problem reduces to that of solving a first-order partial differential equation (FOPDE) [5]. Consequently, the computability problem reduces to determining whether a given FOPDE has a unique solution, or many solutions. In general, this is a difficult mathematical problem, as researchers in this area have discovered ([2], [3], [4]).

Suppose we are given an image and are told that it represents the orthographic projection of a smooth lambertian surface illuminated by a distant point source located on the axis of projection. We are in a position to form the FOPDE

$$R(p,q) = E(x,y),$$

where E and R represent the image and reflectance map [6] respectively. The questions arise:

(i) if, unknown to us, the image is of a plane, how ambiguous is the image? Are there smooth, non-planar surfaces that could generate the image, and if so, what are they?

(ii) if, unknown to us, the image is of a wholly illuminated hemisphere, what is the complete set of smooth shapes satisfying the image? What boundary conditions suffice to make the hemisphere solution unique? How is the degree of ambiguity affected by considering only a subregion of the image?

The answers to these questions given below are extracted from my thesis [2]. Some aspects of the second question have been considered (in a very different way) by both Bruss [3], and Deift and Sylvester [4].

II FINDING SOLUTIONS BY SOLVING FOPDEs

A. An image of a plane

Given a plane with surface normal $(p_s, q_s, -1)$ that is illuminated by a source in the direction (0,0,-1) as described above, we obtain the shape from shading problem implicit in the FOPDE

$$\frac{1}{\sqrt{\left(\frac{\partial z}{\partial x}\right)^2 + \left(\frac{\partial z}{\partial y}\right)^2 + 1}} = \cos\theta_i . \qquad (1)$$

Here, $\cos\theta_i = \frac{1}{\sqrt{p_s^2 + q_s^2 + 1}}$, the cosine of the incident angle of light. The task is to find all shapes z(x,y) which satisfy this equation over some region A in the xy-plane. It is easily shown that the system of planes

$$z(x,y) = ax + \sqrt{t^2 - a^2}\, y + C \quad (\text{where } t = \tan\theta_i)$$

satisfies (1). Therefore, providing p_s and q_s are not both equal to zero, the image is ambiguous because it can be satisfied by an infinite number of planes. This is obvious when we consider the reflectance map which provides precisely the set of planes that have a given intensity value (in this case, the set will be one-dimensionally infinite). It remains to determine whether there are non-planar solutions satisfying (1). Indeed there are, since any sections of the cones

$$z(x,y) = \pm\, t^2 \sqrt{(x - \alpha)^2 + (y - \beta)^2} + \gamma$$

will satisfy (1) providing the point (α,β) does not belong to the region A (for otherwise the solution would fail to be smooth). Furthermore, it can be shown that the system of surfaces captured by the parametric form

$$r(\theta,\psi) = a(\theta) + \psi b(\theta), \tag{2}$$

where

$$a(\theta) = (\phi(\theta)\cos\theta - \phi'(\theta)\sin\theta, \phi(\theta)\sin\theta + \phi'(\theta)\cos\theta, 0)$$

$$b(\theta) = (\cos\theta\,,\ \sin\theta, -t\,),$$

will satisfy (1) for any smooth function ϕ that is supplied. Naturally, it will be necessary to ensure that a given solution is well-defined and single-valued over A, but some sections of any of the solutions will satisfy (1) after undergoing a suitable translation and dilation (which will always be permitted since the image is of constant intensity).

The general solution to (1) given above also shows, interestingly, that all solutions are ruled surfaces (figure 1).

B. An image of a hemisphere

For a hemisphere imaged under the conditions described in section 1, the shape from shading problem reduces to finding shapes $z(x,y)$ that satisfy the equation

$$\frac{1}{\sqrt{\left(\frac{\partial z}{\partial x}\right)^2 + \left(\frac{\partial z}{\partial y}\right)^2 + 1}} = \sqrt{1 - x^2 - y^2} \tag{3}$$

over various regions $A \subseteq \{(x,y) : x^2 + y^2 < 1\}$. The hemisphere of radius 1 and its concave reversal given by

$$z(x,y) = \pm\sqrt{1 - x^2 - y^2} + C$$

are solutions to the equation. To determine other solutions, it is useful to transform (3) into the equivalent polar form

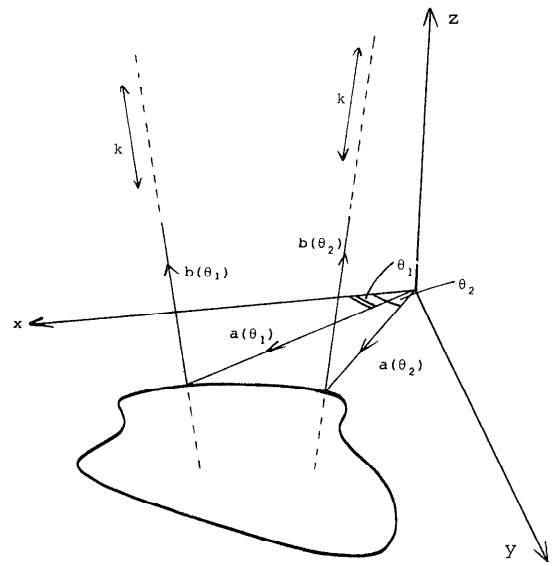

Figure 1 Ruled surface solutions to an image of a plane can be constructed by generating functions a and b (using equation (2)) and employing them as shown.

$$\left(\frac{\partial z}{\partial r}\right)^2 + \frac{1}{r^2}\left(\frac{\partial z}{\partial \theta}\right)^2 = \frac{r^2}{1 - r^2}\,. \tag{4}$$

Now, the system of surfaces

$$z(r,\theta) = k\theta + g(r,k) + M$$

will satisfy (4) provided that

$$\left(\frac{\partial g}{\partial r}\right)^2 + \frac{k^2}{r^2} = \frac{r^2}{1 - r^2}\,.$$

Consequently, if we choose

$$g(r,k) = \pm \int \sqrt{\frac{r^2}{1 - r^2} - \frac{k^2}{r^2}}\, dr,$$

we obtain

$$z(r,\theta;k,M) = k\theta \pm \int \sqrt{\frac{r^2}{1 - r^2} - \frac{k^2}{r^2}}\, dr + M.$$

This is a two-parameter solution with the following properties:

(i) $z(r,\theta;0,M) = \pm \int \sqrt{\frac{r^2}{1 - r^2}}\, dr + M = \pm\sqrt{1 - r^2} + C$

which correspond to the hemisphere solutions given above.

(ii) $g(r,k)$ is only defined for

$$\frac{r^2}{1 - r^2} \geq \frac{k^2}{r^2}\,.$$

Thus we require that

$$\frac{k\sqrt{k^2 + 4} - k^2}{2} \le r^2 < 1$$

and so when $k \neq 0$, $z(r,\theta;k,M)$ is defined only over an annulus in the $z = 0$ plane.

(iii) when $k \neq 0$, $z(r,0;k,M)$ is not periodic over 2π and is therefore not smooth over $\{(r,\theta) : 0 \le r < 1\}$.

(iv) $g(r,k)$ is bounded since

$$\int_{r_0}^{r} \sqrt{\frac{r^2}{1 - r^2} - \frac{k^2}{r^2}}\, dr \le \int_{r_0}^{r} \sqrt{\frac{r^2}{1 - r^2}}\, dr$$

$$= \sqrt{1 - r_0^2} - \sqrt{1 - r^2}.$$

As $r \to 1$, $g(r,k) \to \sqrt{1 - r_0^2}$.

The $k \neq 0$ solutions to (3) are helical bands defined over an annulus in the $z = 0$ plane. Any graph defined over $0 \le \theta \le 2\pi$ that is selected from one of these solutions will not be smooth. Figure 2 gives an example of such a graph.

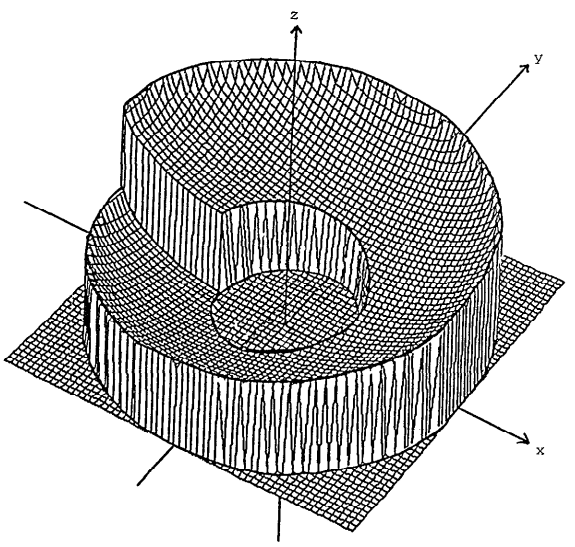

Figure 2 Under the conditions described in the text, the helical band shown above will look the same as a similar portion of a hemispherical bowl. Some sections of an image of a hemisphere are therefore ambiguous.

Brooks [2] shows that there are no solutions other than the hemisphere and its reversal that satisfy (3) over the whole of the disc $\{(x,y) : x^2 + y^2 < 1\}$*. However, this is not true for some sections of the image. Figure 3a shows some subregions over which there exist many solutions and figure 3b shows some subregions over which there exist only two solutions.

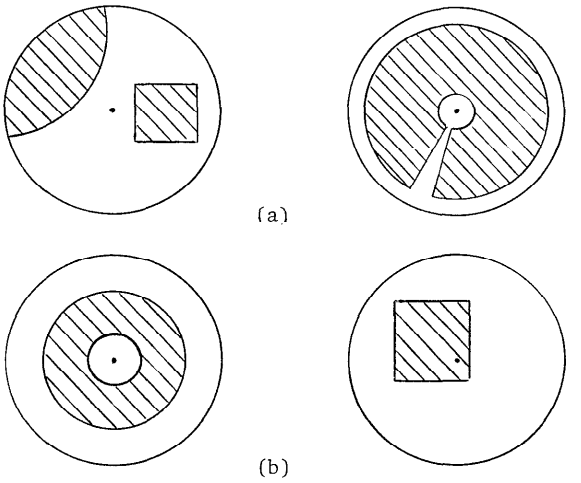

Figure 3 Shaded subsets of an image of a hemisphere. The subsets in figure (a) have an infinite number of solutions, while those in figure (b) have two.

Any subregion of $\{(x,y) : 0 < x^2 + y^2 < 1\}$ that does not completely surround the point $(x,y) = (0,0)$ will have infinitely many solution shapes. Conversely, any subregion of $\{(x,y) : 0 \le x^2 + y^2 < 1\}$ that contains or surrounds $(x,y) = (0,0)$ will have only two solution shapes —the hemisphere and its reversal. The inclusion of the point $(x,y) = (0,0)$ in the image severely constrains the number of possible solutions. This is not surprising when we reconsider (3) and note that the surface normal of any solution at $(0,0,z)$ is bound to be $(0,0,-1)$.

III CONCLUSION

Our understanding of the computability of shape from shading must be improved. This will lead to a better appreciation of the limitations of current algorithms, and will help reveal the boundary conditions necessary for a solution to be determined. For example, it will prove useful to know that a region of constant intensity must correspond to a ruled surface (if it was formed according to the conditions given earlier). Any available boundary conditions can then further reduce the size of this already restricted solution set.

*This requires consideration of possible envelope solutions.

ACKNOWLEDGEMENTS

I would like to thank John Rice for his mathematical assistance and encouragement. Bruce Nelson offered valuable comments on a draft of this paper.

REFERENCES

[1] Barrow, H.G. and Tenenbaum, J.M., (1978). Recovering intrinsic scene characteristics from images, in Computer Vision Systems, Hanson, A. and Riseman, E. (eds.), Academic Press.

[2] Brooks, M.J., (1982). Shape from shading discretely, Ph.D. thesis, Department of Computer Science, Essex University.

[3] Bruss, A.R., (1981). The image irradiance equation: its solution and application, Ph.D. thesis, Artificial Intelligence Lab., Massachusetts Institute of Technology.

[4] Deift, P. and Sylvester, J., (1981). Some remarks on the shape-from-shading problem in computer vision, Journal of mathematical analysis and applications, 84, pp. 235-248.

[5] Horn, B.K.P., (1970). Shape from shading: a method for obtaining the shape of a smooth opaque object from one view, MAC TR-79, MIT.

[6] Horn, B.K.P., (1977). Understanding image intensities, Artificial Intelligence, 8, pp. 201-231.